DESIGN, ANALYSIS AND OPTIMIZATION OF CONNECTING ROD USING ANSYS

[1]VAIBHAV V. MUKKAWAR, [2]ABHIJIT P. KADAM, [3]ABHIJITN. INGOLE, [4]MANGESHD. CHOPADE

[1,2,3,4]B.E., Babasaheb Naik College of Engineering, Pusad, Maharashtra, India
E-mail: [1]vaibhavvmukkawar@gmail.com, [2]abhijit.kadam33@gmail.com, [3]abhijitingole2011@gmail.com

Abstract- Connecting rod is the intermediate link between the piston and the crank. And is responsible to transmit the push and pull from the piston pin to crank pin, thus converting the reciprocating motion of the piston to rotary motion of the crank. Generally connecting rods are manufactured using carbon steel and in recent days aluminium alloys are finding its application in connecting rod. In this work connecting rod is replaced by aluminium based composite material reinforced with silicon carbide and fly ash. And it also describes the modeling and analysis of connecting rod. FEA analysis was carried out by considering two materials of connecting rod for 220cc engine. The parameters like von misses stress and displacement were obtained from ANSYS software. Compared to the former material the new material foundto have less weight and better stiffness. It resulted in reduction of 17.33% of weight.

Keywords- Connecting Rod, ANSYS, Composite, Silicon Carbide, Fly Ash, Analysis

I. INTRODUCTION

Connecting rod is the intermediate link between the piston and the crank and is responsible to transmit the push anpull from the piston pin to crank pin, thus converting the reciprocating motion of the piston to rotary motion of thecrank. Connecting rod, automotives should be lighter and lighter, should consume less fuel and at the same time theyshould provide comfort and safety to passengers, that unfortunately leads to increase in weight of the vehicle. Thistendency in vehicle construction led the invention and implementation of quite new materials which are light and meet design requirements. Lighter connecting rods help to decrease lead caused by forces of inertia in engine as it does not require big balancing weight on crankshaft. Application of metal matrix composite enables safety increase and advances that leads to effective use of fuel and to obtain high engine power. Honda Company had already started the manufacturing of aluminum connecting rods reinforced with steel continuous fibers. By carrying out these modifications to engine elements will result in effective reduction of weight, increase of durability of particular part, will lead to decrease of overall engine weight, improvement in its traction parameters, economy and ecological conditions such as reduction in fuel consumption and emission of harmful substances into atmosphere. K. Sudershankumar et al, described modeling and analysis of Connecting rod. In his project carbon steelconnecting rod is replaced by aluminium boron carbide connecting rod. Aluminium boron carbide is found to haveworking factory of safety is nearer to theoretical factory of safety, to increase the stiffness by 48.55% and to reducestress by 7.84%.

Vivek C. Pathade et al, he dealt with the stress analysis of connecting rod by finite element method using pro-ewild fire 4.0 and ansys work bench 11.0 software. And concluded that the stress induced in the small end of theconnecting rod are greater than the stresses induced at the bigger end, therefore the chances of failure of the connectingrod may be at the fillet section of both end.

Pushpendrakumar Sharma et al, performed the static FEA of the connecting rod using the software and saidoptimization was performed to reduce weight. Weight can be reduced by changing the material of the current forgedsteel connecting rod to crackable forged steel (C70). And the software gives a view of stress distribution in the wholeconnecting rod which gives the information that which parts are to be hardened or given attention during manufacturing stage.

Ram bansal et al, in his paper a dynamic simulation was conducted on a connecting rod made of aluminium alloyusing FEA. In this analysis of connecting rod were performed under dynamic load for stress analysis and optimization.Dynamic load analysis was performed to determine the in service loading of the connecting rod anFEA was conducted to find the stress at critical locations.

II. THEOROTICAL CALCULATION OF CONNECTIG ROD

1.Pressure calculation :
Consider a 220cc engine,
Engine type air cooled 4-stroke
Bore × Stroke(mm) = 67×62.4
Displacement=220 cm^3
Maximum Power = 20.8 Bhp at 8500rpm
Maximum torque= 19.12 Nm at 7000rpm
Mechanical efficiency of the engine (η) = 80 %.

$$\eta = \frac{\text{BrakePower (B.P)}}{\text{IndicatedPower (I.P.)}}$$

B.P.= $\frac{2\pi NT}{60} = \frac{2\pi x 19.12 x 7000}{60}$ = 14.015 kW

I.P = $\frac{Bp}{\eta} = \frac{14.015}{0.8}$ = 17.518 kW

I.P = P x A x L x $\frac{N}{2}$

I.P = P x $\frac{\pi}{4}$ x D^2 x L x $\frac{N}{2}$

17.518 x 1000 =

P x $\frac{\pi}{4}$ x $(0.067)^2$ x (0.0624)x$\frac{7000}{2x60}$

So, P = 13.65 x 10^5 N/m^2 or

P = 1.365MPa

Maximum Pressure,P_{max}=10xP

=10x1.365

=13.65MPa

2.Design Calculation of connecting rod:

In general

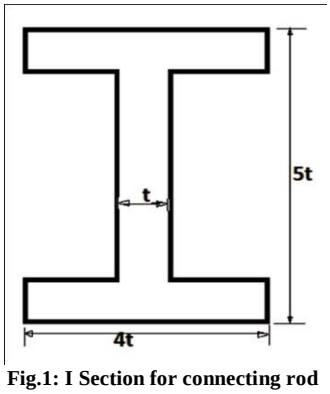

Fig.1: I Section for connecting rod

From standards,

- Thickness of flange and web of the section = t
- Width of the section B = 4t
- Height of the section H = 5t
- Area of the section A = $11t^2$
- Moment of inertia about x axis Ixx= 34.91t4
- Moment of inertia about y axis Iyy= 10.91t4
- Therefore Ixx/Iyy= 3.2

So, in the case of this section (assumed section) proportions shown above will be satisfactory.

Length of the connecting rod (L) = 2 times the stroke

L = 124.8 mm

Fc= (πd2/4) * gas pressure

Fc= 48125.154 N

WB = FC × F. S.=48125.154 ×1.78 = 85662.77 N

We know that radius of gyration of the section about X-axis,

Kxx= $\sqrt{\frac{I xx}{A}} = \sqrt{\frac{34.91t^4}{11t^2}}$ = 1.78 t

Radius of crank,

r = $\frac{\text{stroke length}}{2} = \frac{62.4}{2}$ = 31.2 mm

Length of Connecting Rod = 2×stroke

= 2×62.4

=124.8 mm

∴Equivalent length of the connecting rod for both ends hinged, L= l = 124.8 mm

1.For AL360 MATERIAL

Now according to Rankine's formula, we know that buckling load (WB),

85662.77 = 7.35 mm (α = 0.002)

Thus, the dime= $\frac{170\times 11t^2}{1+\alpha\left(\frac{L}{Kxx}\right)}$nsions of I-section of the connecting rod are :

Thickness of flange and web of the section

= t =7.35 mm

Width of the section, B = 4 t = 4 × 7.35 =29.4 mm

Height of the section,H= 5 t = 5 × 7.35 = 36.75 mm

Depth near the big end,

H1 = 1.2H = 1.2 × 36.75 = 44 mm and

depth near the small end,

H2 = 0.85H = 0.85 × 36.75 = 31.23 mm

2.FORALUMINIUM 6061-9%SIC-15%FLY ASH

Now according to Rankine's formula, we know that buckling load (WB),

85662.77= $\frac{363*11t^2}{1+\alpha\left(\frac{L}{Kxx}\right)}$ = 5.254 mm

Width of the section, B = 4 t = 4 × 5.254=21.01 mm

Height of the section,H= 5 t = 5 ×5.254= 26.27 mm

Depth near the big end,

H1 = 1.2H = 1.2 × 26.27 = 31.52 mm

Depth near the small end,

H2 = 0.85H = 0.85 × 26.27 = 22.32 mm

TABLE 1

MATERIAL PROPERTIES USED FOR ANALYSIS

III. RESULTS AND DISCUSSION ANALYSIS

For the finite element analysis, 13.65MPa of pressure is used. The analysis is carried out using ANSYS software. The pressure is applied at the small end of connecting rod keeping big end fixed. The maximum and minimum von-misses stress, displacement are noted from ANSYS.

TABLE 2

COMPARISON OF STRESS AND DISPLACEMENT FOR DIFFERENT MATERIALS

Sr no	Material	Tensile load		Compressive load	
		Stress (MPa)	Displac-ement (mm)	Stress (MPa)	Displace-ment (mm)
1	AL360	124.06	0.07584	84.389	0.048535
2	AL6061	120.84	0.07486	80.983	0.046828

1. VON-MISES STRESS PLOTS:

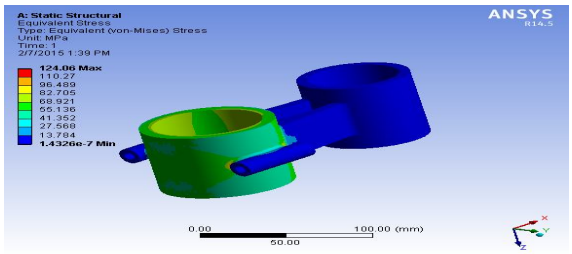

Fig 2. Von-mises stress for tensile load Al-360

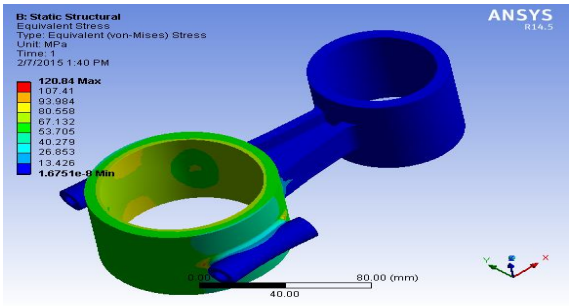

Fig 3.Von mises stress for tensile load,ALFASiC

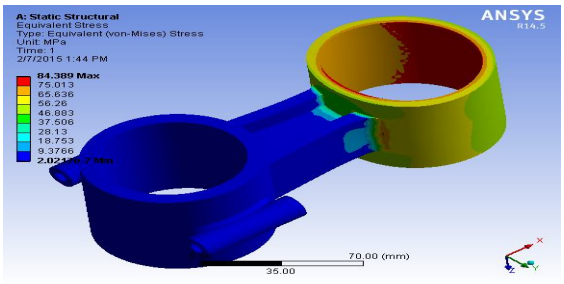

Fig 4.Von-Mises Stress For Compressive Load,Al360

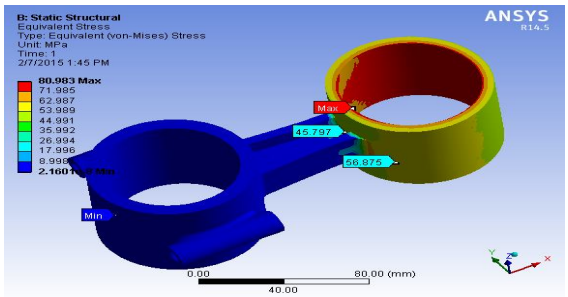

Fig 5.Von mises stress for compressiveload, ALFASiC

2. DISPLACEMENT PLOTS

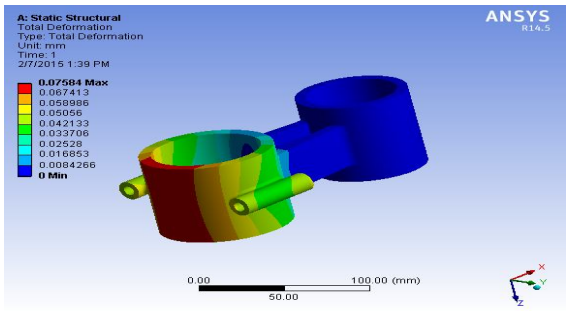

Fig 6.Displacement For Tensile Load Al-360

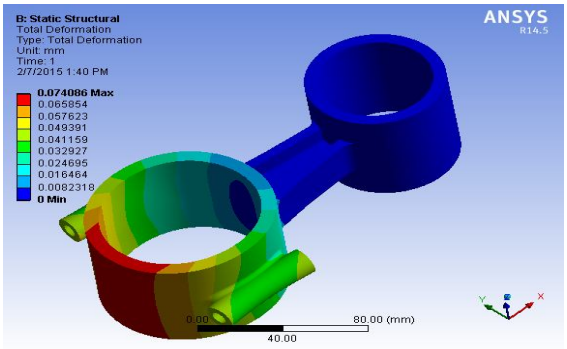

Fig 7.Displacement For Tensile Load ALFASiC

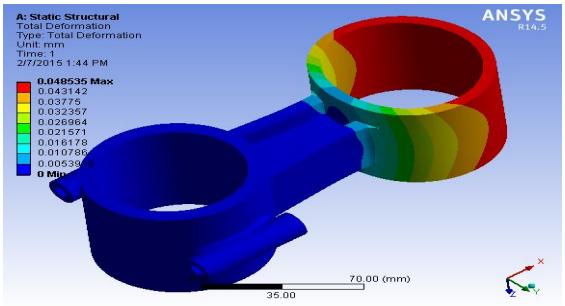

Fig 8. Displacement For Compression Load Al-360

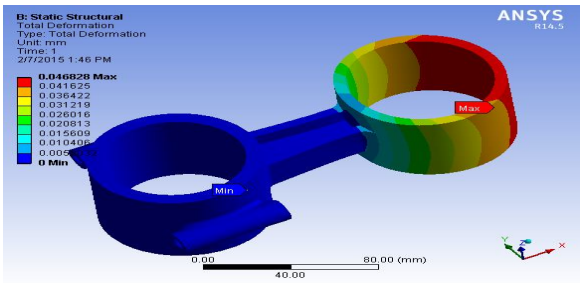

Fig 9. Displacement For Compression Load, ALFASiC

From the fig 13 the maximum displacement occurs in the connecting rod is 0.048535 mm. From the fig 14 the maximum displacement occurs in the connecting rod is0.046828 mm.

IV. VOLUME, WEIGHT AND STIFFNESS OF THE CONNECTING ROD.

a) Weight of the Connecting Rod.

For aluminium 360:

The volume of the connecting rod used is 2.6805e5mm.^{3} Therefore the mass of the connecting rod for respective materials are:

Weight = volume * density

Weight = 2.6805e5 *2.8e-3

Weight = 750.54 grams

For aluminium 6061-9%SiC-15%fly ash

The volume of the connecting rod used is 2.3751e5 mm^3. Therefore the mass of the connecting rod for respectivematerials are:

Weight = volume * density

Weight = 2.3751e5 * 2.61161e-3=620.28 grams

Therefore there is net difference of 130.26 grams in the new connecting rod for the same volume.

V. RESULT

- Foraluminium 360

Weight of the connecting rod = 750.54 grams

Deformation = 0.07584 mm

- Foraluminium 6061-9%SiC-15%fly ash

Weight of the connecting rod = 620.28 grams

Deformation = 0.074086 mm

CONCLUSION

- Weight can be reduced by changing the material of the current al360 connecting rod to hybrid alfasic composites.

- The optimised connecting rod is 17.33% lighter than the current connecting rod.
- Deformation can be reduced by changing the material of the current al360 connecting rod to hybrid

REFERENCES

[1] K. Sudershan Kumar, Dr. k. Tirupathi Reddy, Syed AltafHussan "Modeling and analysis of two Wheeler connecting rod", International Journal of Modern Engineering Research, Vol -2, Issue- 5, pp-3367-3371, Sep-Oct-2012.

[2] Vivek.c.pathade, BhumeshwarPatle, Ajay N. Ingale "Stress Analysis of I.C. Engine Connecting Rod by FEM", International Journal of Engineering and Innovative Technology, Vol-1, Issue-3, pp-12-15, March2012.

[3] Pushpendra Kumar Sharma1, BorseRajendra R, "fatigue analysis and optimisation of connecting rod using finite element analysis", International Journal Of advance research in Science and Engineering, Vol. No.1, Issue No. I, pp-3367-3371, September 2012.

[4] Ram Bansal, "Dynamic simulation of connecting rod made of aluminium alloy using finite element analysis approach", IOSR Journal of Mechanical and Civil Engineering, Volume 5, Issue 2, PP 01-05, Jan. - Feb. 2013.

★★★