EXPERIMENTAL DETERMINATION OF TENSILE PROPERTIES OF BAMBOO STRUCTURE

[1]G. LOKESHA, [2]B.G. VIJAYASIMHA REDDY, [3]T. YELLA REDDY, [4]M. VENKATARAMA REDDY

[1]Associate professor and Head of Mechanical Engineering Department, Vemana Institute of Technology, Bangalore, India.
[2]Principal, Vemana Institute of Technology, Bangalore, India
[3]Dean R&D Vemana Institute of Technology, Bangalore, India, and Former Professor UMIST, UK.
[4]Former Professor and Head of Mechanical Engineering, Bangalore Institute of Technology, Bangalore, India.
E-mail: lokeshgreddy.vit@gmail.com

Abstract - This paper presents a summary of studies on through thickness variation of mechanical properties viz; modulus, strength and percentage elongation in bamboos. Tensile tests were conducted on thin axial strips of bamboo cut in radial direction. It is found that bamboo is stronger on the outside (in all respects) than in the inner regions. This variation is according to the stresses caused in the bamboo to withstand the environmental forces it is subjected to, showing that bamboo is a nearly perfect naturally engineered functionally graded material and structure.

Keywords - Bamboo, Debonding, Fracture, Functionally Graded Material, Strength

I. INTRODUCTION

Bamboos are a special quick growth grass species, some are solid and some are hollow, which matures in about 5 years. Bamboo is a natural ligno – cellouse composite composed of fibers (bast fibers in vascular bundles) and matrix (thin walled cells around vascular bundles, vessels and sieve tubes in vascular bundles) [1]. The distribution of fibers of bamboo along the radial direction shows a gradient [2], dense in the outer regions and sparser in the inner regions. It is also a smart material, which can withstand extreme wind forces from any direction. It has other positive features, such as light-weight design based on a hollow circular cross-section, good flexibility [3] and tough character due to its thin walls with discretely distributed nodes and contributes to its buckling resistance.

Bamboo is an ecofriendly material used in wide range of applications in engineering and in civil constructions over centuries [4]. Presently applications of bamboo include scaffolding, fiber reinforced composites, bridges and as reinforcement into concrete. Bamboo has also been used for fabrication of bicycles [5] due to its efficient combination of strength and stiffness to weight ratio, besides its hollow tube form structure and relatively high shape factors, which are also important for the structural design of high structures in bending.

Significant research has been carried out on the physical and mechanical properties of bamboo [2, 6]. The volume fraction of fibers increases across the thickness of the bamboo culm, from inside to outside surface. In Fig. 1 three regions of the fiber density in the cross-section can be observed. The regions are classified as; high fiber density (at and near the outside surface), there are more fibers even though the bundle size is smaller, it consists of more fiber and less matrix. Low fiber density (at and near inside surface), there is more matrix and fewer fibers and bundle itself is bigger. Medium fiber density (between regions higher and low density).

Bamboo a natural bio material is attracting more and more attention from researchers due to its unique biological structure and mechanical performance. There have also been studies of the fracture, toughening mechanisms and tensile properties of bamboo structures [7, 8, 9, 10]. In the present work the experimental studies on the variation of the tensile strength of seasoned bamboo in the axial direction across the thickness and along the height of a culm is presented. The properties of the bamboo culm structure were measured using an Micro UTM. Results are presented and compared [12].

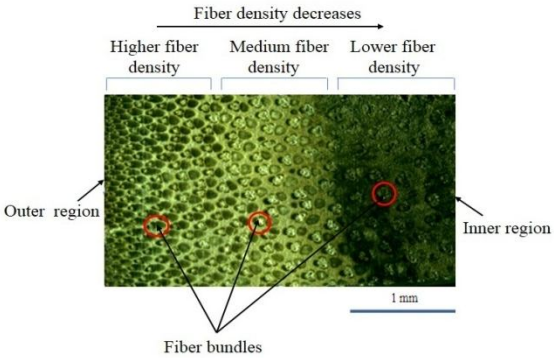

Fig.1 Optical image of the functionally graded structure of bamboo

II. EXPERIMENTS

2.1. Materials and specimens

Specimens for the tests were taken from a seasoned bamboo culm which was free from visual imperfections like cracks, voids, decay, etc. The bamboo used for testing was grown in the southern region of India (Bangalore). Three sets of 7 specimens were prepared and labeled as T1-T7 from top part,

M1-M7 from middle region and B1-B7 from bottom region. Specimen 1 was the outermost and 7 was the innermost region. In a length of 6 m stem, bottom region was selected 1m above the base (external diameter about 76 mm), middle region at 4m from the base (external diameter about 74 mm) and top region around 5 m from the base (external diameter about 70 mm) as shown in Fig.2.First bamboo was cut into small pieces length wise. Specimens were sliced longitudinally around the circumference of the bamboo culm at different locations (seven layers) as shown in the Fig. 2. The gauge length of the specimens was maintained, nominally at 60 mm, (total length was 110 mm) and nominal width was 20 mm. The specimens were flat. The nominal thickness of the specimens as 1.2 mm. End tabs were glued to the strips to help fix the specimens in the grips of the testing machine. A schematic of the specimen is shown in Fig.3. These were according to the requirements set by the Bureau of Indian standards for tensile test specimens [11].

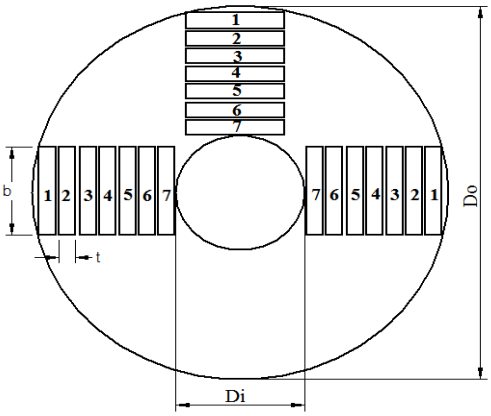

Fig. 2. Specimens cut in bamboo culm at different locations

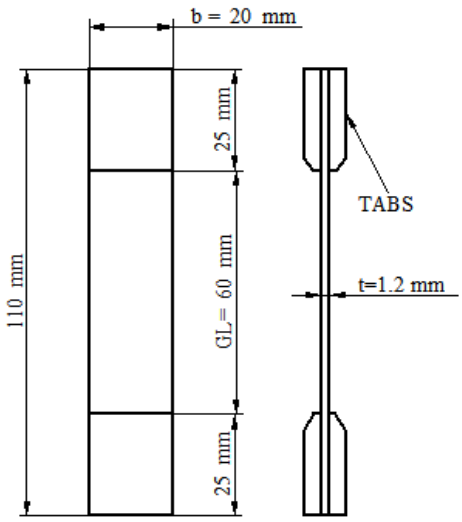

Fig.3 Tension test specimen for bamboo

2.2. Method

The tensile tests were carried out on the Micro UTM (10 kN) at Centre for Nano-Science and Engineering (CeNSE) of Indian Institute of Science, Bangalore. Tests were carried out at a constant cross-head speed of 2 mm/min. Force – displacement data with a resolution of 0.001 mm were recorded to obtain load and displacement curves. A schematic of the stress v/s strain and load v/s displacement is shown in Fig.4. The elastic, elasto-plastic regions were identified to obtain E, σ_u and ε_f. Young's modulus is the slope of the linear region, ultimate tensile stress (σu) is at the maximum load and εf is at the maximum load. The load –deflection traces were bilinear, with location and extended of the changeover depending on the location of the specimens in the culm. Initiation of fractures were noted and recorded.

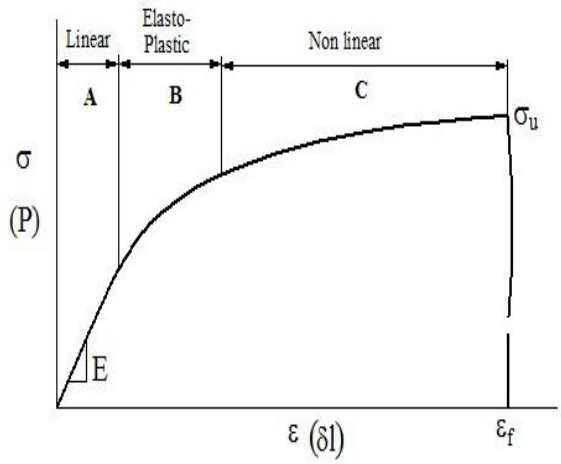

Fig. 4. Schematic curve for stress v/s strain and load v/s displacement.

III. RESULTS AND DISCUSSIONS

Fig. 5 is a photograph of a specimen (M1) showing, extensive debonding and fracture of fibers in the region C (Fig. 4). Not all fibers broke at the same cross-section but such fractures were spread. Fig. 6 is a photograph of the specimen after the test showing complete fracture and debonding of fibers. In the fiber rich outer layers fiber debonding and fracture were seen more clearly. Fiber debonding started when ultimate load was reached. The specimens in the matrix rich inner regions did not show much debonding of fibers and severed at maximum load. Table 1 gives the mean values of Young's modulus, ultimate tensile stress and percentage of elongation obtained for bottom, middle and top regions.

Particular	*Young's modulus, E (GPa)*	*Percentage of elongation, εf*	*Ultimate tensile stress, σu (MPa)*
Bottom	4.57	6.8	204.8
Middle	4.34	6.1	185.28
Top	4.24	5.1	163.42

Table 1. Mean values of Young's modulus, ultimate tensile stress and percentage of elongation.

Load-displacement curves of specimens from top, middle and bottom regions are shown in Figs. 7(a)–(c) respectively. All these show similar behavior i.e maximum load, maximum displacement and slope at of elastic range is maximum for outer layer. Also maximum load, maximum displacement and slope at of elastic range for bottom is higher than the other two cases. It is evident from the graphs that the properties vary through the thickness and along the height. Quantitative variation of the properties derived from Figs. 7(a)–(c) are presented and discussed below.

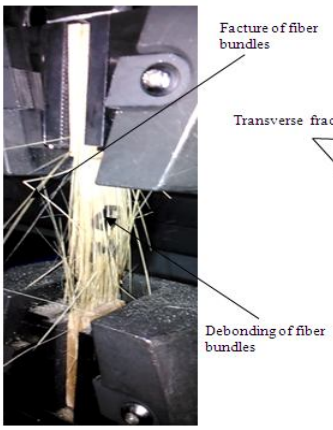

Fig. 5 Fiber / fiber bundle fracture and debonding (Specimen M1) during the test.

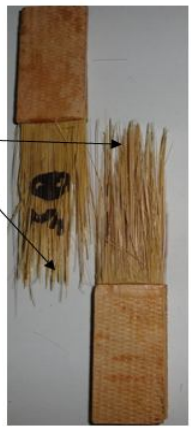

Fig.6 Failed specimen (Specimen M1) after the test.

The outer layer are nearly four times stronger (average load 9 kN) than the inner zone (average 2.5 kN). It is also evident the difference in % elongation of the specimen made of fiber rich outer layers are higher than those of the inner layer specimens. This indicates that the matrix does not have the same extension capacity as the fibers (less ductility).

Figs. 8 - 10 show the variation of Young's modulus (E), ultimate tensile stress (σu) and % elongation (εf) for three cases (top, bottom and middle) across the radius. It can be seen that variations of all these properties increase from inner to outer radius for all cases. The variation of σu and E range from 50 to 100% (increase) while that of εf is > 300 % from inner to outer radius. The variation get steeper in the outer zone.

The bulk values of E, σu and εf (average values in Figs (8) – (10)) are shown in Fig.11. It is seen that the Young's modulus through height (top to bottom) with variation co-efficient of 7%. At the top of the culm mean ultimate stress is 20 % less than at the bottom. Similarly mean % elongation of top the culm is 27 % less than at the bottom. The material is stronger and tougher in the lower region compared to the top. The results (Young's modulus & ultimate stress) shows variation format from inner to outer radius is similar to those shown in Janssen [12].

The variation of Young's modulus, Ultimate strength and % elongation across the thickness from inner to outer radius is given by the best exponential equations (1) to (3).

$$E = 2.8548\ e\ 0.1019\ r \quad (1)$$

$$\sigma u = 67.273\ e\ 0.2239\ r \quad (2)$$

$$\varepsilon f = 1.895\ e\ 0.2516\ r \quad (3)$$

Where r - radius of the culm

The variation of Young's modulus, Ultimate strength and % elongation along the height of the culm is found to be best represented by the polynomial equations (4) to (6).

$$E = -0.05h2-0.05h+4.7 \quad (4)$$

$$\sigma u = -0.5h2-18.5h+224 \quad (5)$$

$$\varepsilon f = -0.25h2+0.05h+7.1 \quad (6)$$

Where h - height of the culm

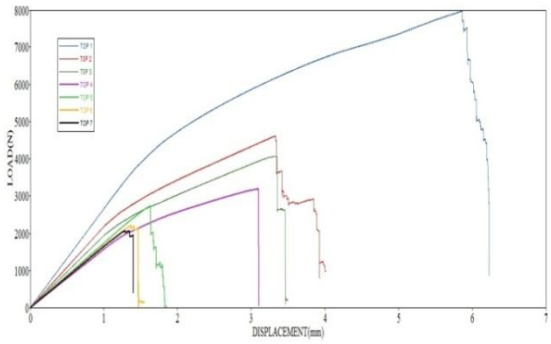

Fig. 7(a) Load- Displacement curves of specimens T1 - T7

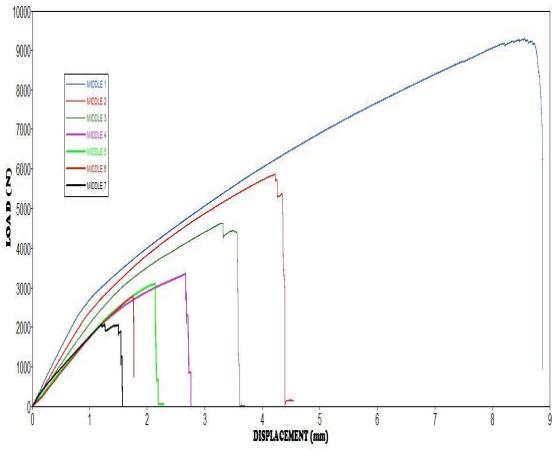

Fig. 7(b) Load- Displacement curves of specimens M1 – M7

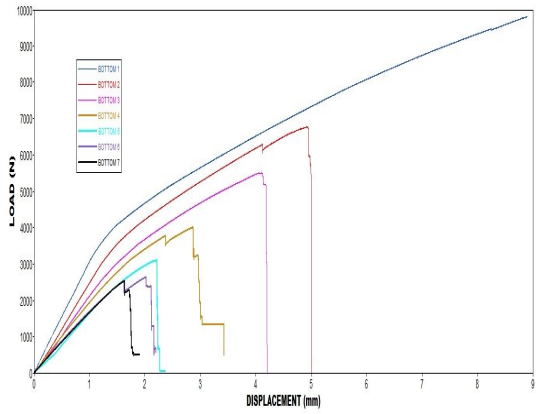

Fig. 7 (c) Load- Displacement curves of specimens B1 – B7

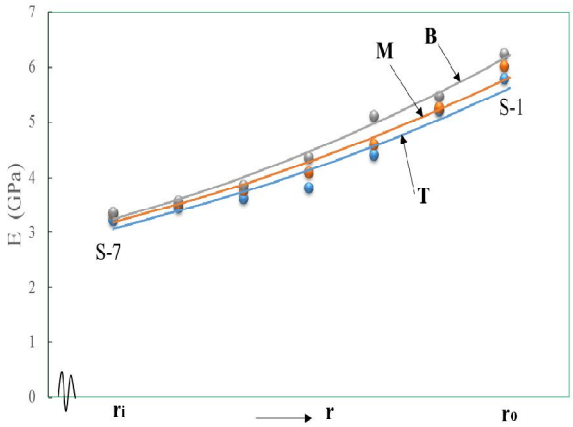

Fig. 8 Variation of E across the thickness for top, middle and bottom portions

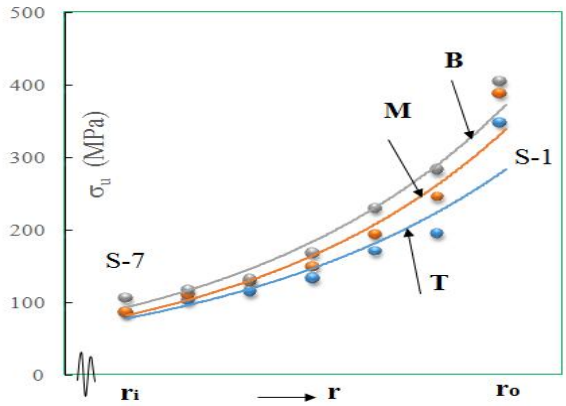

Fig. 9 Variation of σ_u across the thickness for top, middle and bottom portions

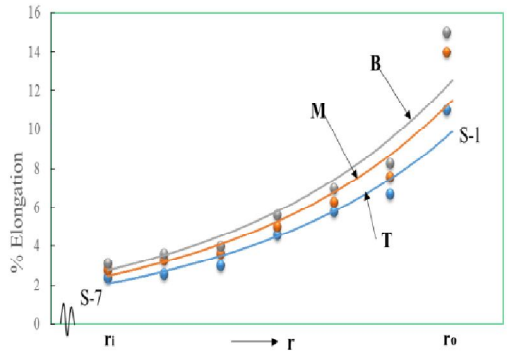

Fig. 10 Variation ε_f of across the thickness for top, middle and bottom portions

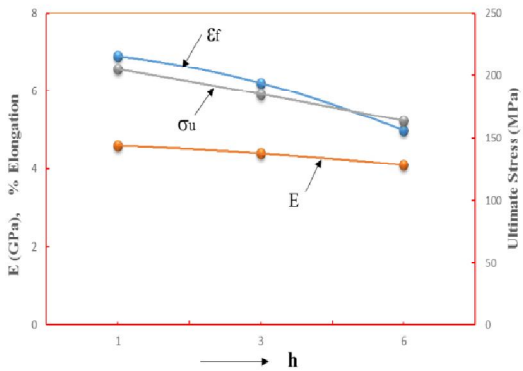

Fig. 11 Variation of mean E, σ_u and ε_f with height

CONCLUSIONS

The behavior of the series of specimens (taken at different locations across the thickness) of the three regions at different heights under tensile load showed similar load-displacement graphs. The load bearing capacity and elastic modulus are highest at the outside region and ground level, decrease towards the inner region and with height. This reflects the fiber distribution along a radial line in the cross-section of the bamboo. Bamboo is mainly subjected to wind loads (bending) and self-weight (compression). Bending stresses are highest in the outer regions of a stem and at the ground level. It is seen from the results above that the necessary E, σ_u and ε_f properties are maximum in the base region of the culm and in the outermost regions of the stem. This not an accident but surely a clever design of the natural engineer-BAMBOO.

ACKNOWLEDGEMENT

The author is thankful to the Principal of Vemana Institute of Technology and Management KRJS, the parent body for their constant encouragement as well as the facilities provided. The author is also grateful to Dr. M.M. Nayak**,** professor, Centre for Nano-Science and Engineering (CeNSE) department, Indian Institute of Science (IISc), Bangalore, for his help and support in conducting tests.

REFERENCES

[1] Liese W., Anatomy and utilization of bamboos. European Bamboo Society J. May 6. (1995), pp. 5-12.
[2] Amada S., Ichikawa Y., Munekata T., Nagase Y. and Shimizu.K., Fiber texture and mechanical graded structure of bamboo. Composite Part B. 28(B), (1997), pp.13-20.
[3] Janssen J. J., A. Building with bamboo (2nd Ed.). Intermediate Technology Publication Limited, London. (1995), 65.
[4] Lo T.Y., Cui H.Z., Tang P.W.C., Leu H.C., The effect of fiber density on strength capacity of bamboo, Construct Build Material, (2008), 22(7): 1532-5.
[5] Johnson S., Reinventing the wheel, The daily Princeton (2008), available at http://www.dailyprinceton.com/2008/04/24/20982
[6] K. Ghavami1, C. S. Rodrigues and S. Paciornik, Bamboo: Functionally Graded Composite Material, Asian Journal of Civil Engineering (Building and Housing) Vol. 4, No. 1 (2003), pp. 1-10.
[7] Amada, S., Untao, S., Fracture Properties of Bamboo, Composites Part B, 32, (2001), pp. 451-459.
[8] Shao Z.P, Fang C.H., and Tian G.L., Mode I interlaminar fracture property of moso bamboo (Phyllostachys pubescence), wood Sci. Technology (2009), 43:527-36.
[9] Ray A.K., Mondal S., Das S.K. and Ramachandrarao P., Bamboo – a functionally graded composite- correlation between microstructure and mechanical strength, J. Material Sci. (2005); 40:5249-53.
[10] Naogata F. and Takahashi H., Intelligent Functionally Graded Material, Composite Engineering. (1995), 5(7), pp. 743 -751.
[11] 'Methods of tests for bamboo'. Bureau of Indian Standards, Manak Bhavan, 9 Bahadur Shah Zafar Marg, New Delhi 110002 (2008).
[12] Janssen, J. J., A Mechanical properties of bamboo, number 37 in Forestry Sciences, Dordrecht: Kluwer Academic Publishers, (1991).